VSZ Series 2/3" 1/1.8"

All VSZ models were designed to be compact in size and have a long WD. Without changing the WD this series has magnification ranges from 0.1x - 10.0x which is great for variable magnification needing applications.

Features
- 1/2" - 2/3" sensor support
- 0.1x - 10.0x Mag. ranges
- 95 - 213mm WD
- Variable zoom

8x Zoom

VSZ-M0108S

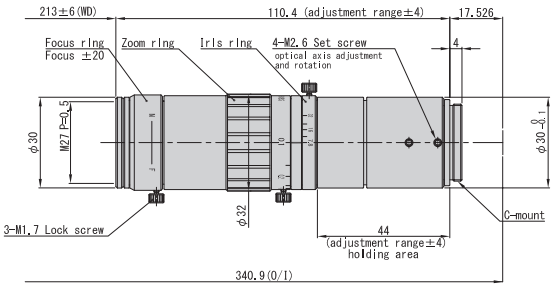

Optical Mag. Range		0.1x ~ 0.8x		
Optical Mag.		0.1x	0.4x	0.8x
FOV(VxH)	2/3"	—		
	1/2"	48.0 x 64.0 mm	12.0 x16.0 mm	6.0 x 8.0 mm
	1/3"	36.0 x 48.0 mm	9.0 x 12.0 mm	4.5 x 6.0 mm
WD		213.0 mm ±6		
O/I (Object & Imager Distance)		340.9 mm		
Working F/# *Value at Iris Open		7.8	7.8	8.8
NA		0.006	0.026	0.045
DOF at PCoC φ0.04mm		62.4 mm	3.9 mm	1.1 mm
TV Distortion (1/2")		-0.16 %	0.03 %	0.05 %
Relative Illuminance (Y=4)		80 %	82 %	73 %
Wavelength		Visible		
Mount		C-Mount		
Flange Back		17.526 mm		
Sensor Size (max.)		1/2"		
Co-Axial Prism		—		
Filter Thread		M 27 P = 0.5		
Weight (approx.)		134 g		
Dimension		φ32(max.) x L = 110.4 mm		

VSZ-M0324S

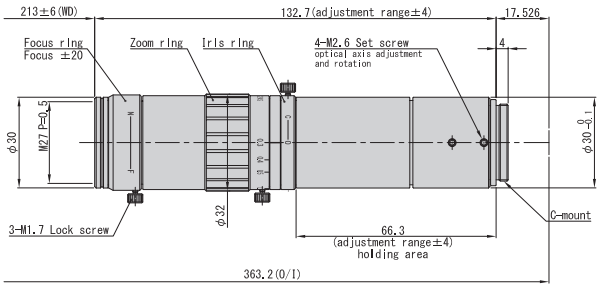

Optical Mag. Range		0.3x ~ 2.4x		
Optical Mag.		0.3x	1.2x	2.4x
FOV(VxH)	2/3"	—		
	1/2"	16.0 x 21.3 mm	4.0 x 5.3 mm	2.0 x 2.7 mm
	1/3"	12.0 x 16.0 mm	3.0 x 4.0 mm	1.5 x 2.0 mm
WD		213.0 mm ±6		
O/I (Object & Imager Distance)		363.2 mm		
Working F/# *Value at Iris Open		23.2	24.5	26.0
NA		0.006	0.024	0.046
DOF at PCoC φ0.04mm		20.6 mm	1.4 mm	0.4 mm
TV Distortion (1/2")		0.02 %	0.05 %	0.04 %
Relative Illuminance (Y=4)		99 %		
Wavelength		Visible		
Mount		C-Mount		
Flange Back		17.526 mm		
Sensor Size (max.)		1/2"		
Co-Axial Prism		—		
Filter Thread		M 27 P = 0.5		
Weight (approx.)		165 g		
Dimension		φ32(max.) x L = 132.7 mm		

10x Zoom

VSZ-10100

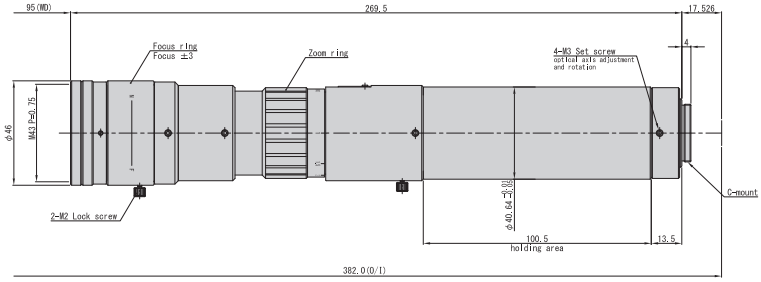

Optical Mag. Range		1.0x ~ 10.0x		
Optical Mag.		1.0x	4.0x	10.0x
FOV(VxH)	2/3"	7.1 x 8.4 mm	1.8 x 2.1 mm	0.7 x 0.8 mm
	1/2"	4.8 x 6.4 mm	1.2 x 1.6 mm	0.5 x 0.6 mm
	1/3"	3.6 x 4.8 mm	0.9 x 1.2 mm	0.4 x 0.5 mm
WD		95.0 mm		
O/I (Object & Imager Distance)		382.0 mm		
Working F/# *Value at Iris Open		13.3	15.4	36.7
NA		0.038	0.130	0.136
DOF at PCoC φ0.04mm		1.1 mm	0.08 mm	0.03 mm
TV Distortion (2/3")		0.16 %	-0.01 %	0.02 %
Relative Illuminance (Y=5.5)		86 %	67 %	100 %
Wavelength		Visible		
Mount		C-Mount		
Flange Back		17.526 mm		
Sensor Size (max.)		2/3"		
Co-Axial Prism		—		
Filter Thread		M 43 P = 0.75		
Weight (approx.)		820 g		
Dimension		φ46(max.) x L = 293.5 mm		

VSZ-10100COL

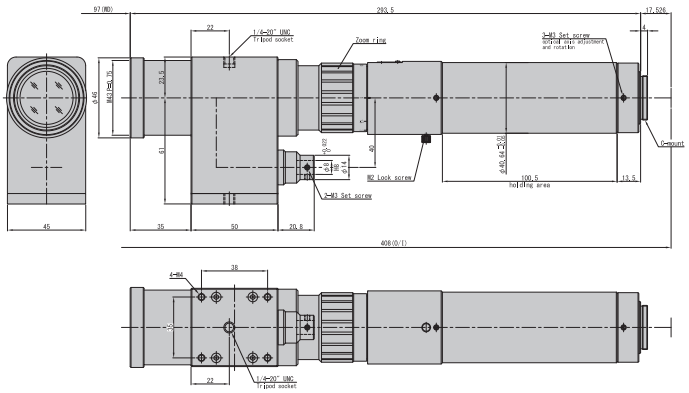

Optical Mag. Range		1.0x ~ 10.0x		
Optical Mag.		1.0x	4.0x	10.0x
FOV(VxH)	2/3"	7.1 x 8.4 mm	1.8 x 2.1 mm	0.7 x 0.8 mm
	1/2"	4.8 x 6.4 mm	1.2 x 1.6 mm	0.5 x 0.6 mm
	1/3"	3.6 x 4.8 mm	0.9 x 1.2 mm	0.4 x 0.5 mm
WD		97.0 mm		
O/I (Object & Imager Distance)		408.0 mm		
Working F/# *Value at Iris Open		13.3	15.4	36.7
NA		0.038	0.130	0.136
DOF at PCoC φ0.04mm		1.1 mm	0.08 mm	0.03 mm
TV Distortion (2/3")		0.16 %	-0.01 %	0.02 %
Relative Illuminance (Y=5.5)		86 %	67 %	100 %
Wavelength		Visible		
Mount		C-Mount		
Flange Back		17.526 mm		
Sensor Size (max.)		2/3"		
Co-Axial Prism		Built-in		
Filter Thread		M 43 P = 0.75		
Weight (approx.)		1210 g		
Dimension		φ46(max.) x L = 293.5 mm		

Telecentric Zoom Lens 6x Zoom (Available for Dent models)

VSZ-0530

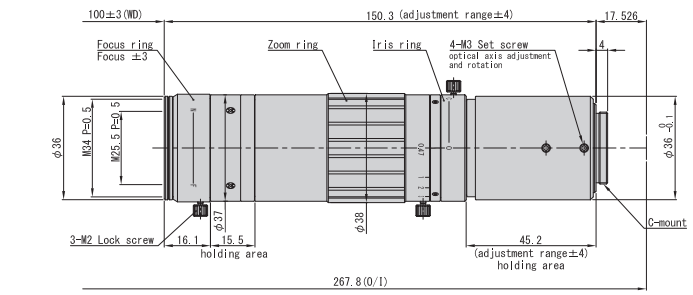

Optical Mag. Range		0.47x ~ 3.0x		
Optical Mag.		0.47x	1.2x	3.0x
FOV(VxH)	1/1.8"	11.5 x 15.1 mm	4.5 x 5.9 mm	1.8 x 2.4 mm
	1/2"	10.2 x 13.6 mm	4.0 x 5.3 mm	1.6 x 2.1 mm
	1/3"	7.7 x 10.2 mm	3.0 x 4.0 mm	1.2 x 1.6 mm
WD		100.0 mm ±3		
O/I (Object & Imager Distance)		267.8 mm		
Working F/# *Value at Iris Open		6.9	9.3	19.8
NA		0.034	0.065	0.076
DOF at PCoC φ0.04mm		2.5 mm	0.5 mm	0.2 mm
TV Distortion (1/1.8")		-0.09 %	0.12 %	0.11 %
Relative Illuminance (Y=4.4)		51 %	77 %	99 %
Wavelength		Visible		
Mount		C-Mount		
Flange Back		17.526 mm		
Sensor Size (max.)		1/1.8"		
Co-Axial Prism		—		
Weight (approx.)		230 g		
Dimension		φ38(max.) x L = 150.3 mm		

VSZ-0530CO

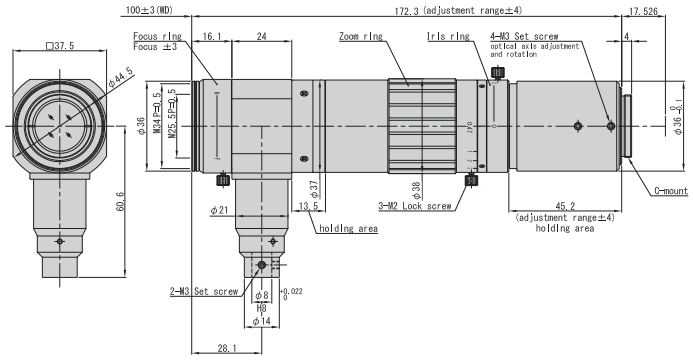

Optical Mag. Range		0.47x ~ 3.0x		
Optical Mag.		0.47x	1.2x	3.0x
FOV(VxH)	1/1.8"	11.5 x 15.1 mm	4.5 x 5.9 mm	1.8 x 2.4 mm
	1/2"	10.2 x 13.6 mm	4.0 x 5.3 mm	1.6 x 2.1 mm
	1/3"	7.7 x 10.2 mm	3.0 x 4.0 mm	1.2 x 1.6 mm
WD		100.0 mm ±3		
O/I (Object & Imager Distance)		289.8 mm		
Working F/# *Value at Iris Open		6.9	9.3	19.8
NA		0.034	0.065	0.076
DOF at PCoC φ0.04mm		2.5 mm	0.5 mm	0.2 mm
TV Distortion (1/1.8")		-0.09 %	0.12 %	0.11 %
Relative Illuminance (Y=4.4)		51 %	77 %	99 %
Wavelength		Visible		
Mount		C-Mount		
Flange Back		17.526 mm		
Sensor Size (max.)		1/1.8"		
Co-Axial Prism		Built-in		
Weight (approx.)		320 g		
Dimension		φ44.5(max.) x L = 172.3 mm		

VSZ-0745

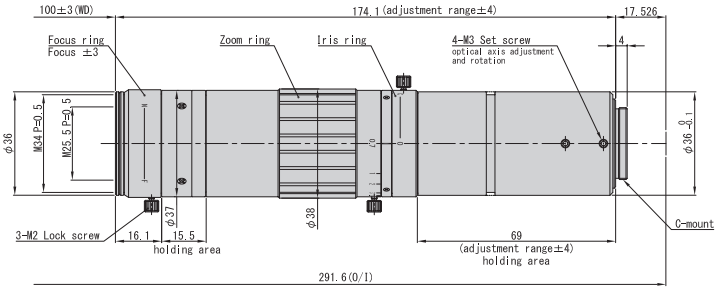

Optical Mag. Range		0.7x ~4.5x		
Optical Mag.		0.7x	1.8x	4.5x
FOV(VxH)	2/3"	10.1 x 12.0 mm	3.9 x 4.7 mm	1.6 x 1.9 mm
	1/2"	6.9 x 9.1 mm	2.7 x 3.6 mm	1.1 x 1.4 mm
	1/3"	5.1 x 6.9 mm	2.0 x 2.7 mm	0.8 x 1.1 mm
WD		100.0 mm ±3		
O/I (Object & Imager Distance)		291.6 mm		
Working F/# *Value at Iris Open		10.3	13.8	29.0
NA		0.034	0.065	0.078
DOF at PCoC φ0.04mm		1.7 mm	0.3 mm	0.1 mm
TV Distortion (2/3")		-0.03 %	0.09 %	0.08 %
Relative Illuminance (Y=5.5)		71 %	87 %	99 %
Wavelength		Visible		
Mount		C-Mount		
Flange Back		17.526 mm		
Sensor Size (max.)		2/3"		
Co-Axial Prism		—		
Weight (approx.)		260 g		
Dimension		φ38(max.) x L = 174.1 mm		

VSZ-0745CO

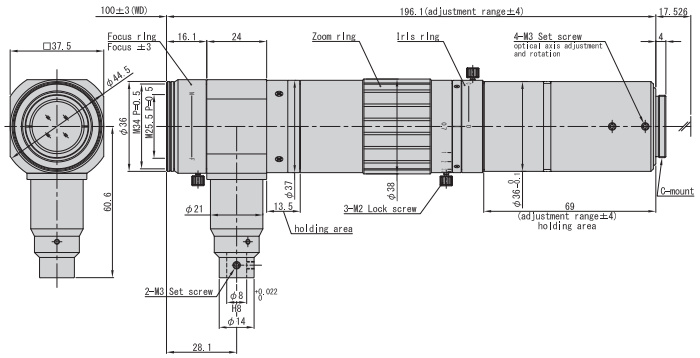

Optical Mag. Range		0.7x ~4.5x		
Optical Mag.		0.7x	1.8x	4.5x
FOV(VxH)	2/3"	10.1 x 12.0 mm	3.9 x 4.7 mm	1.6 x 1.9 mm
	1/2"	6.9 x 9.1 mm	2.7 x 3.6 mm	1.1 x 1.4 mm
	1/3"	5.1 x 6.9 mm	2.0 x 2.7 mm	0.8 x 1.1 mm
WD		100.0 mm ±3		
O/I (Object & Imager Distance)		313.6 mm		
Working F/# *Value at Iris Open		10.3	13.8	29.0
NA		0.034	0.065	0.078
DOF at PCoC φ0.04mm		1.7 mm	0.3 mm	0.1 mm
TV Distortion (2/3")		-0.03 %	0.09 %	0.08 %
Relative Illuminance (Y=5.5)		71 %	87 %	99 %
Wavelength		Visible		
Mount		C-Mount		
Flange Back		17.526 mm		
Sensor Size (max.)		2/3"		
Co-Axial Prism		Built-in		
Weight (approx.)		340 g		
Dimension		φ44.5(max.) x L = 196.1 mm		

VSZ-03X/04X/05X/07X

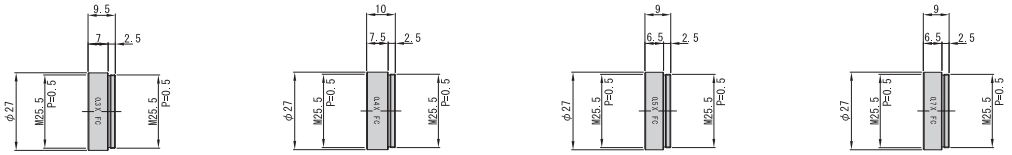

Model	VSZ-03X	VSZ-04X	VSZ-05X	VSZ-07X
Converter Mag.	0.3x	0.4x	0.5x	0.7x
Zoom Lens	VSZ-0745 and VSZ-0530	VSZ-0745 and VSZ-0530	VSZ-0745 and VSZ-0530	VSZ-0745 and VSZ-0530
Mag. range with Zoom Lens	0.21x~1.35x / 0.141x~0.9x	0.28x~1.8x / 0.188x~1.2x	0.35x~2.25x / 0.235x~1.5x	0.49x~3.15x / 0.329x~2.1x
WD *at Focus center	337.6mm	250.6mm	201.0mm	140.0mm

Zoom Lens Diagram

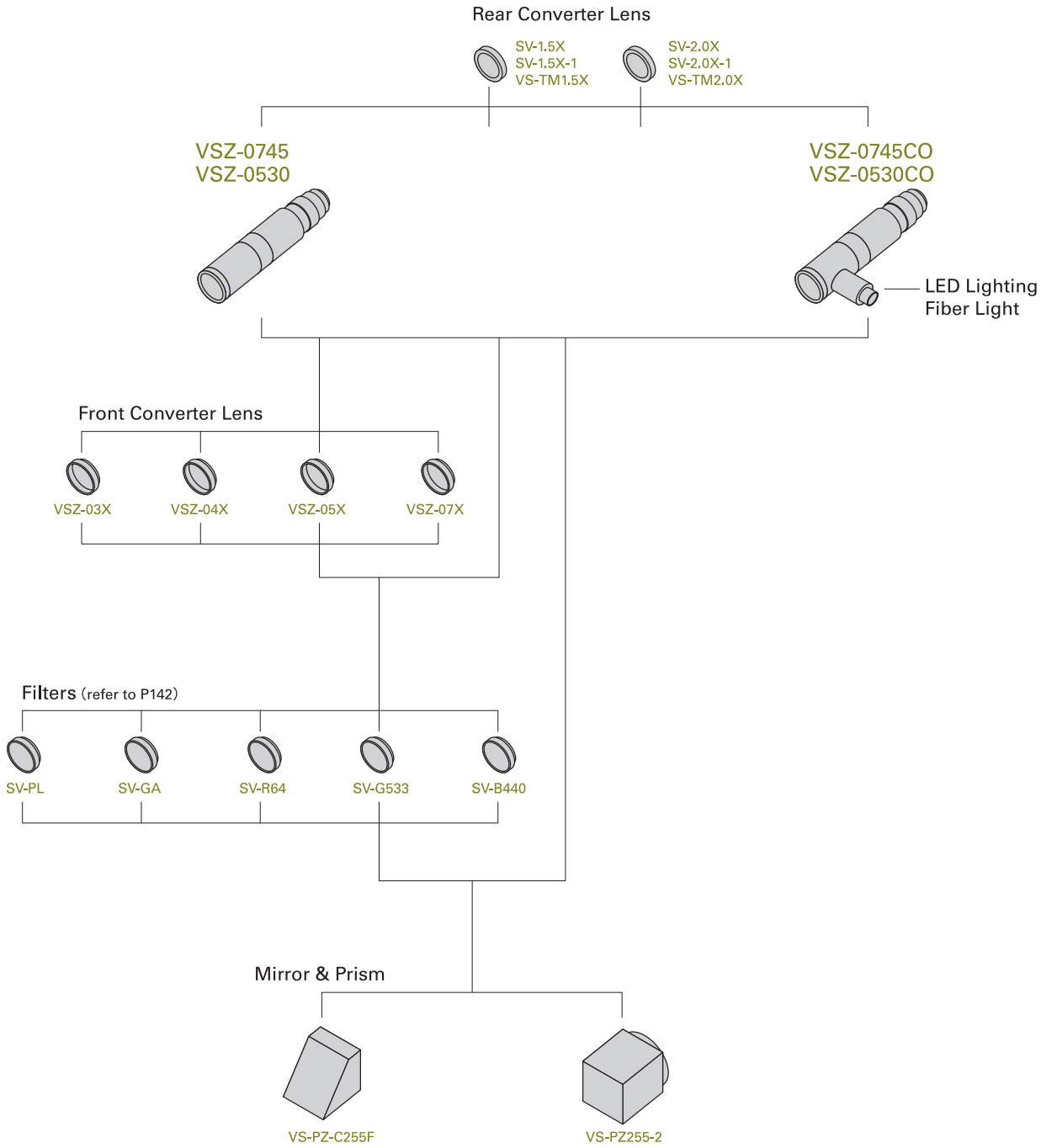

Table for WD, FOV and Extension Tube Length

Suitable configurations for applications can be found in this chart.

Configurations		FOV* (mm)		WD	Mag Range		FOV*1 (mm) with Rear Converter			
							SV-1.5X		SV-2.0X	
F.C*2 + Zoom Lens	Camera	Low Mag	High Mag	(mm)	Low Mag	High Mag	Low Mag	High Mag	Low Mag	High Mag
None + VSZ-0745	1/3"	5.1x6.9	0.8x1.1	100	0.7x	4.5x	3.4x4.6	0.5x0.7	2.6x3.5	0.4x0.6
	1/2"	6.9x9.1	1.1x1.4				4.6x6.1	0.7x0.9	3.5x4.6	0.6x0.7
	1/1.8"	7.5x10.1	1.2x1.6				5.0x6.7	0.8x1.0	3.8x5.6	0.6x0.8
	2/3"	9.4x12.6	1.0x2.0				6.3x8.4	1.0x1.3	4.7x6.3	0.5x1.0
VSZ-07X + VSZ-0745	1/3"	7.3x9.8	1.1x1.5	140	0.49x	3.15x	4.9x6.5	0.8x1.0	3.7x4.9	0.6x0.8
	1/2"	9.8x13.1	1.5x2.0				6.5x8.7	1.0x1.4	4.9x6.5	0.8x1.0
	1/1.8"	10.8x14.4	1.7x2.2				7.2x9.6	1.1x1.5	5.4x7.2	0.8x1.1
	2/3"	13.5x18	2.1x2.8				9.0x12.0	1.4x1.9	6.7x9.0	1.0x1.4
VSZ-05X + VSZ-0745	1/3"	10.3x13.7	1.6x2.1	201	0.35x	2.25x	6.9x9.1	1.1x1.4	5.1x6.9	0.8x1.1
	1/2"	13.7x18.3	2.1x2.8				9.1x12.2	1.4x1.9	6.9x9.1	1.1x1.4
	1/1.8"	15.1x20.1	2.3x3.1				10.1x13.4	1.6x2.1	7.5x10.1	1.2x1.6
	2/3"	18.9x25.1	2.9x3.9				12.6x16.8	2.0x2.6	9.4x12.6	1.5x2.0
VSZ-04X + VSZ-0745	1/3"	12.9x17.1	2.0x2.7	250.6	0.28x	1.8x	8.6x11.4	1.3x1.8	6.4x8.6	1.0x1.3
	1/2"	17.1x22.9	2.7x3.6				11.4x15.2	1.8x2.4	8.6x11.4	1.3x1.8
	1/1.8"	18.9x25.1	2.9x3.9				12.6x16.8	2.0x2.6	9.4x12.6	1.5x2.0
	2/3"	23.6x31.4	3.7x4.9				15.7x21.0	2.4x3.3	11.8x15.7	1.8x2.4
VSZ-03X + VSZ-0745	1/3"	17.1x22.9	2.7x3.6	337.6	0.21x	1.35x	11.4x15.2	1.8x2.4	8.6x11.4	1.3x1.8
	1/2"	22.9x30.5	3.6x4.7				15.2x20.3	2.4x3.3	11.4x15.2	1.8x2.4
	1/1.8"	25.1x33.5	3.9x5.2				16.8x22.3	2.6x3.5	12.6x16.8	2.0x2.6
	2/3"	31.4x41.9	4.9x6.5				21.0x27.9	3.3x4.3	15.7x21.0	2.4x3.3
None + VSZ-0530	1/3"	7.7x10.2	1.2x1.6	100	0.47x	3.0x	5.1x6.8	0.8x1.1	3.8x5.1	0.6x0.8
	1/2"	10.2x13.6	1.6x2.1				6.8x9.1	1.1x1.4	5.1x6.8	0.8x1.1
	1/1.8"	11.2x15.0	1.8x2.3				7.5x10.0	1.2x1.6	5.6x7.5	0.9x1.2
	2/3"	—	—				—	—	—	—
VSZ-07X + VSZ-0530	1/3"	10.9x14.6	1.7x2.3	140	0.329x	2.1x	7.3x9.7	1.1x1.5	5.5x7.3	0.9x1.1
	1/2"	14.6x19.5	2.3x3.0				9.7x13.0	1.5x2.0	7.3x9.7	1.1x1.5
	1/1.8"	16.0x21.4	2.5x3.4				10.7x14.3	1.7x2.2	8.0x10.7	1.3x1.7
	2/3"	—	—				—	—	—	—
VSZ-05X + VSZ-0530	1/3"	15.3x20.4	2.4x3.2	201	0.235x	1.5x	10.2x13.6	1.6x2.1	7.7x10.2	1.2x1.6
	1/2"	20.4x27.2	3.2x4.3				13.6x18.2	2.1x2.8	10.2x13.6	1.6x2.1
	1/1.8"	22.5x30.0	3.5x4.7				15.0x20.0	2.3x3.1	11.1x15.0	1.8x2.3
	2/3"	—	—				—	—	—	—
VSZ-04X + VSZ-0530	1/3"	19.1x25.5	3.0x4.0	250.6	0.188x	1.2x	12.8x17.0	2.0x2.7	9.6x12.8	1.5x2.0
	1/2"	25.5x34.0	4.0x5.3				17.0x22.7	2.7x3.6	12.8x17.0	2.0x2.7
	1/1.8"	28.1x37.4	4.4x5.9				18.7x25.0	2.9x3.9	14.0x18.7	2.2x2.9
	2/3"	—	—				—	—	—	—
VSZ-03X + VSZ-0530	1/3"	25.5x34.0	4.0x5.3	337.6	0.141x	0.9x	17.0x22.7	2.7x3.6	12.8x17.0	2.0x2.7
	1/2"	34.0x45.4	5.3x7.1				22.7x30.3	3.6x4.7	17.0x22.7	2.7x3.6
	1/1.8"	37.4x49.9	5.9x7.8				25.0x33.3	3.9x5.2	18.7x25.0	2.9x3.9
	2/3"	—	—				—	—	—	—

*1 FOV is calculated from the camera sensor sizes (mm) below.
1/3"= 3.6x4.8 : 1/2"= 4.8x6.4 : 1/1.8"= 5.28x7.04 : 2/3"= 6.6x8.8
If you use a different sensor size, the above FOV will change.

*2 F.C = Front Converter lens