VSZ-MR Series 2/3" 1/1.8"

The VSZ-MR is the motorized version of a subset of VSZ lenses. Designed for a long 100mm WD it is great for automating machine vision applications needing to see objects at variable distances.

Features
- 1/1.8" - 2/3" sensor support
- 0.47x - 3.0x & 0.7x - 4.5x Variable magnification
- 100mm WD
- Motorized variable zoom

Circuit diagram

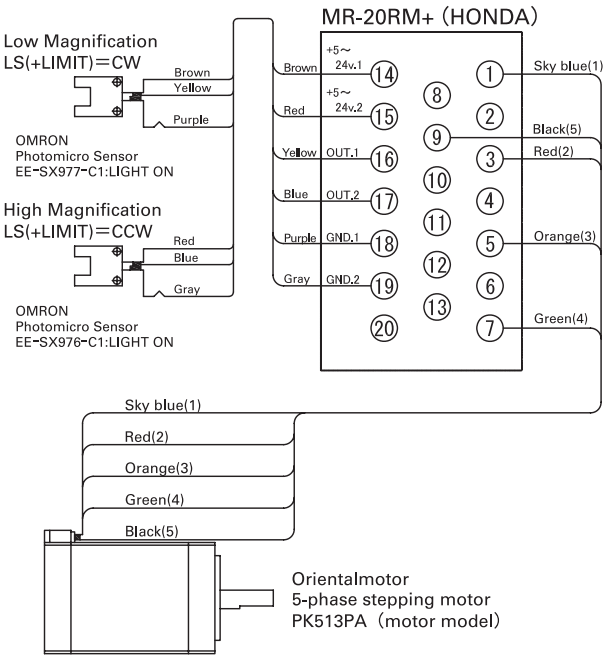

VSZ-0530-MR

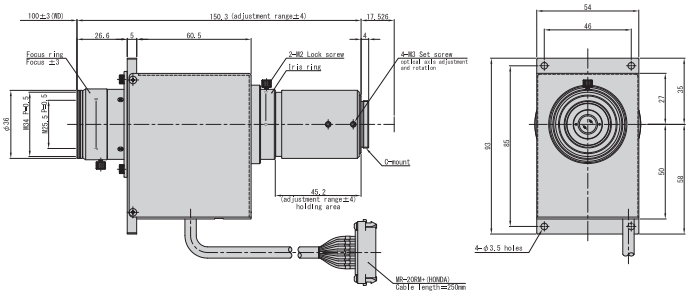

Optical Mag. Range		0.47x ~ 3.0x		
Optical Mag.		0.47x	1.2x	3.0x
FOV(VxH)	1/1.8"	11.5 x 15.1 mm	4.5 x 5.9 mm	1.8 x 2.4 mm
	1/2"	10.2 x 13.6 mm	4.0 x 5.3 mm	1.6 x 2.1 mm
	1/3"	7.7 x 10.2 mm	3.0 x 4.0 mm	1.2 x 1.6 mm
WD		100.0 mm ±3		
O/I (Object & Imager Distance)		267.8 mm		
Working F/# *Value at Iris Open		6.9	9.3	19.8
NA		0.034	0.065	0.076
DOF at PCoC ϕ0.04mm		2.5 mm	0.5 mm	0.2 mm
TV Distortion (1/1.8")		-0.09 %	0.12 %	0.11 %
Relative Illuminance (Y=4.4)		51 %	77 %	99 %
Wavelength		Visible		
Mount		C-Mount		
Flange Back		17.526 mm		
Sensor Size (max.)		1/1.8"		
Co-Axial Prism		—		
Weight (approx.)		560 g		
Dimension		54 x 93(max.) x L = 150.3 mm		

VSZ-0530CO-MR

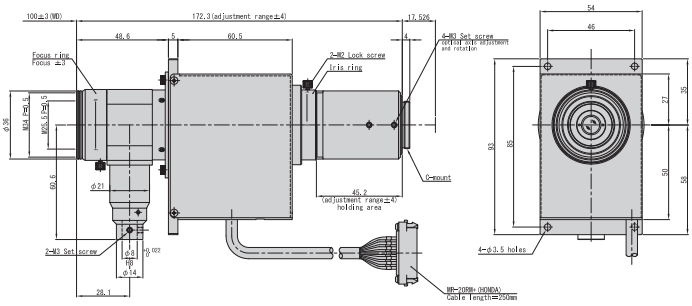

Optical Mag. Range		0.47x ~ 3.0x		
Optical Mag.		0.47x	1.2x	3.0x
FOV(VxH)	1/1.8"	11.5 x 15.1 mm	4.5 x 5.9 mm	1.8 x 2.4 mm
	1/2"	10.2 x 13.6 mm	4.0 x 5.3 mm	1.6 x 2.1 mm
	1/3"	7.7 x 10.2 mm	3.0 x 4.0 mm	1.2 x 1.6 mm
WD		100.0 mm ±3		
O/I (Object & Imager Distance)		289.8 mm		
Working F/# *Value at Iris Open		6.9	9.3	19.8
NA		0.034	0.065	0.076
DOF at PCoC ϕ0.04mm		2.5 mm	0.5 mm	0.2 mm
TV Distortion (1/1.8")		-0.09 %	0.12 %	0.11 %
Relative Illuminance (Y=4.4)		51 %	77 %	99 %
Wavelength		Visible		
Mount		C-Mount		
Flange Back		17.526 mm		
Sensor Size (max.)		1/1.8"		
Co-Axial Prism		Built-in		
Weight (approx.)		—		
Dimension		54 x 93(max.) x L = 172.3 mm		

VSZ-0745-MR

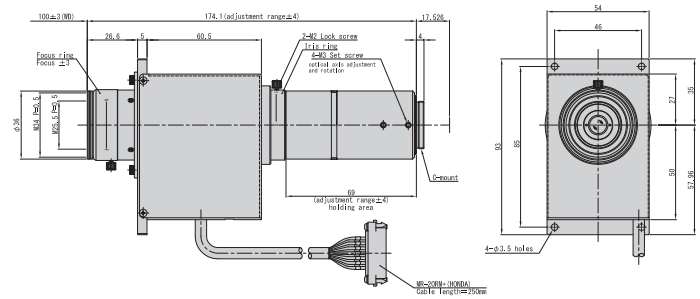

Optical Mag. Range		0.7x ~4.5x		
Optical Mag.		0.7x	1.8x	4.5x
FOV(VxH)	2/3"	10.1 x 12.0 mm	3.9 x 4.7 mm	1.6 x 1.9 mm
	1/2"	6.9 x 9.1 mm	2.7 x 3.6 mm	1.1 x 1.4 mm
	1/3"	5.1 x 6.9 mm	2.0 x 2.7 mm	0.8 x 1.1 mm
WD		100.0 mm ±3		
O/I (Object & Imager Distance)		291.6 mm		
Working F/# *Value at Iris Open		10.3	13.8	29.0
NA		0.034	0.065	0.078
DOF at PCoC ϕ0.04mm		1.7 mm	0.3 mm	0.1 mm
TV Distortion (2/3")		-0.03 %	0.09 %	0.08 %
Relative Illuminance (Y=5.5)		71 %	87 %	99 %
Wavelength		Visible		
Mount		C-Mount		
Flange Back		17.526 mm		
Sensor Size (max.)		2/3"		
Co-Axial Prism		—		
Weight (approx.)		590 g		
Dimension		54 x 93(max.) x L = 174.1 mm		

VSZ-0745CO-MR

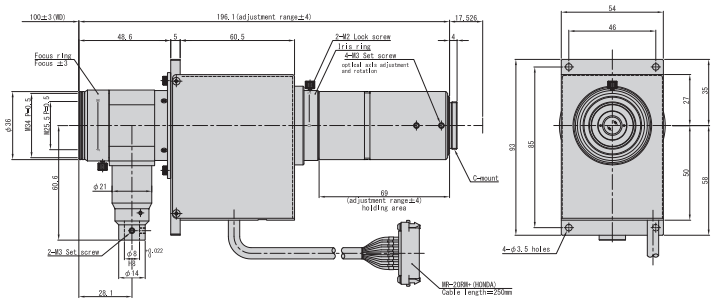

Optical Mag. Range		0.7x ~4.5x		
Optical Mag.		0.7x	1.8x	4.5x
FOV(VxH)	2/3"	10.1 x 12.0 mm	3.9 x 4.7 mm	1.6 x 1.9 mm
	1/2"	6.9 x 9.1 mm	2.7 x 3.6 mm	1.1 x 1.4 mm
	1/3"	5.1 x 6.9 mm	2.0 x 2.7 mm	0.8 x 1.1 mm
WD		100.0 mm ±3		
O/I (Object & Imager Distance)		313.6 mm		
Working F/# *Value at Iris Open		10.3	13.8	29.0
NA		0.034	0.065	0.078
DOF at PCoC ϕ0.04mm		1.7 mm	0.3 mm	0.1 mm
TV Distortion (2/3")		-0.03 %	0.09 %	0.08 %
Relative Illuminance (Y=5.5)		71 %	87 %	99 %
Wavelength		Visible		
Mount		C-Mount		
Flange Back		17.526 mm		
Sensor Size (max.)		2/3"		
Co-Axial Prism		Built-in		
Weight (approx.)		680 g		
Dimension		54 x 93(max.) x L = 196.1 mm		